GlobTek, Inc.
"your power partner"

LITHIUM BATTERY TYPE:
ER261020

Key Characteristics

- High and stable operating voltage
- Low self-discharge rate(less than 1% after 1 year storage at 25℃
- Operating temperature (-55℃~+85℃)
- Hermetic glass-to-metal sealing
- Stainless steel container
- Non-flammable electrolyte
- Spiral type
- UL (MH48131), CE
  http://database.ul.com/cgi-bin/XYV/template/LISEXT/1FRAME/showpage.html?name=BBCV2.MH48131&ccnshorttitle=Lithium+Batteries+-+Component&objid=1081630466&cfgid=1073741824&version=versionless&parent_id=1073747351&sequence=1

ISO9001:2008 approved

Warning

- Fire, explosion and severe burn hazard.
- Do not recharge, crush, disassemble, heat, above 212 F (100℃), incinerate, short circuit or expose contents to water.
- Do not reverse the positive and negative pole of battery while using it.
- Do not solder directly on the battery.
- Dispose of used batteries promptly.
- Please see latest guidelines, cautions and MSDS online:
  http://en.globtek.com/safety-cautions/

Characteristics

Chemistry:	Lithium Thionyl Chloride Li Socl2 Batteries
Nominal capacity (1mA-2.0v)	17000mAh
Nominal voltage	3.6v
Max. constant current	200mA
Max. pulse current	400mA
Weight	100g
Volume	26.2 X 100.0mm
Workable temperature	-55 ~ +85℃

Main Applications

- Utility meters (electricity meters, water meters, gas meters.
- Security systems (door lockers, smoke alarm sensors, detectors)
- CMOS memory and RTC backup
- Vehicle tracking
- Industrial clocks
- Sea buoys, remote monitoring systems, industrial clocks
- Military electronics

Note: Any information here is for reference only. Information is also dependent on actual conditions of use does not guarantee future performance.And subject to change.

©2015 GlobTek, Inc.
Tel: +1.201.784.1000
Fax: +1.201.784.0111
Email: sales@globtek.com

www.globtek.com

LITHIUM BATTERY TYPE:
ER261020

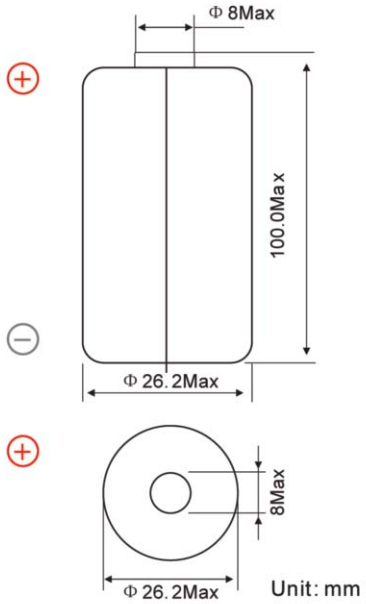

Available terminations:
-/P axial pins
-T/PT2 radial pins
-/PT/TP polarized tabs

Available terminations can be made as requested.

Voltage vs Temperature

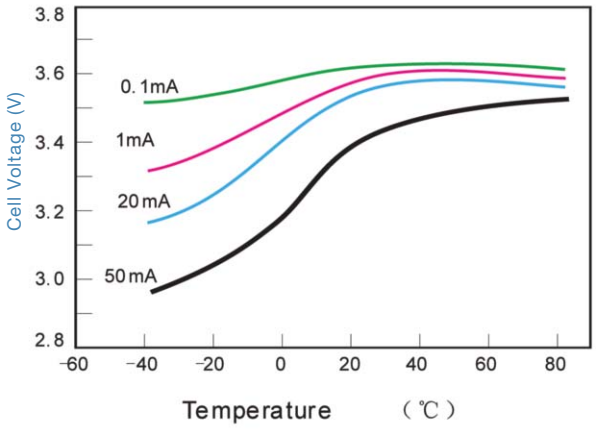

Discharge Characteristics

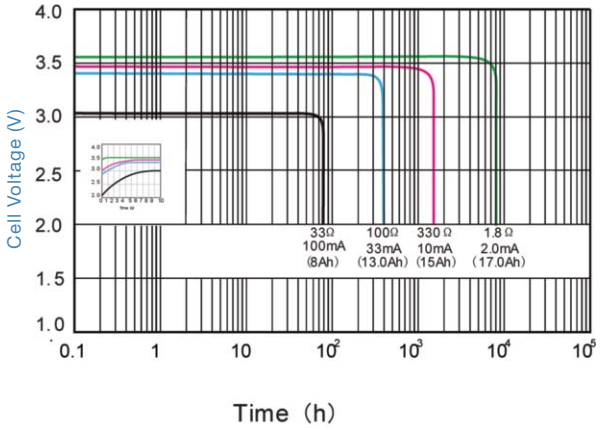

Storage Characteristics

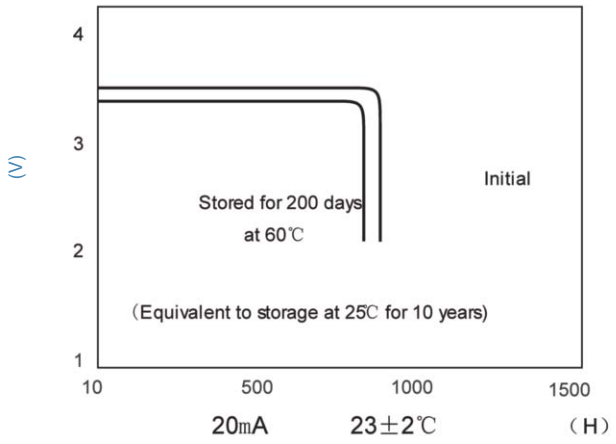

Capacity vs Current

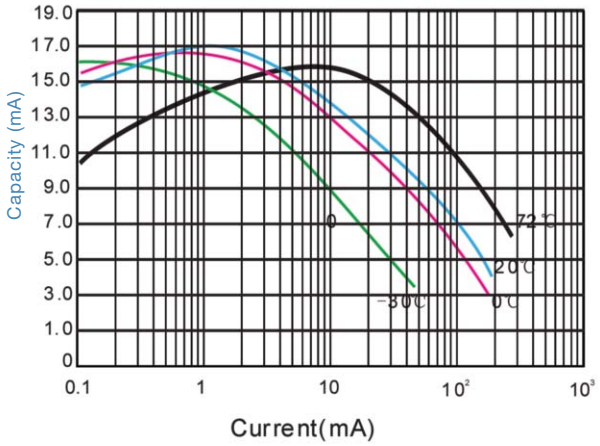

Note: Any information here is for reference only. Information is also dependent on actual conditions of use does not guarantee future performance.And subject to change.

©2015 GlobTek, Inc.
Tel: +1.201.784.1000
Fax: +1.201.784.0111
Email: sales@globtek.com

www.globtek.com